Assembly drawing for the Product Return Bonnet

FILE NAME ; PRV2BONASY_C

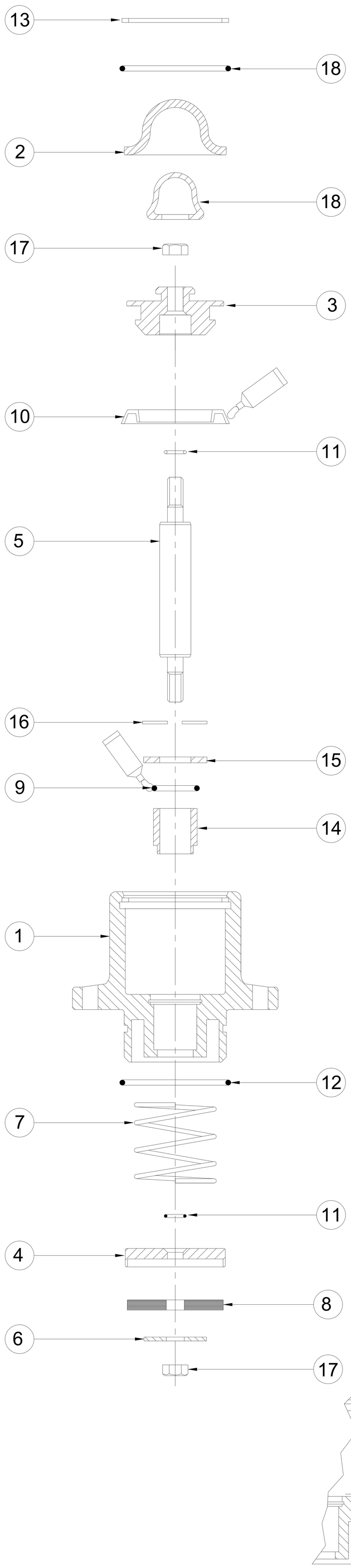

No	Part Number	Qty
1	PRV2BON	1
2	SG1650	1
3	PRV2PIS	1
4	PRV2STPL	1
5	PRV2SPI	1
6	WAS1636	1
7	SPR0546	1
8	HV150S-VIT	1
9	SEA0013	1
10	SEA1649	1
11	SEA1638	2
12	SEA0547	1
13	CIR0548	1
14	BUS0010	1
15	WAS0024	1
16	CIR0025	1
17	NUT1652	2
18	CAP1651	1
19	SEA1637	1
20	AIR0148	1
21	AIR1654	1

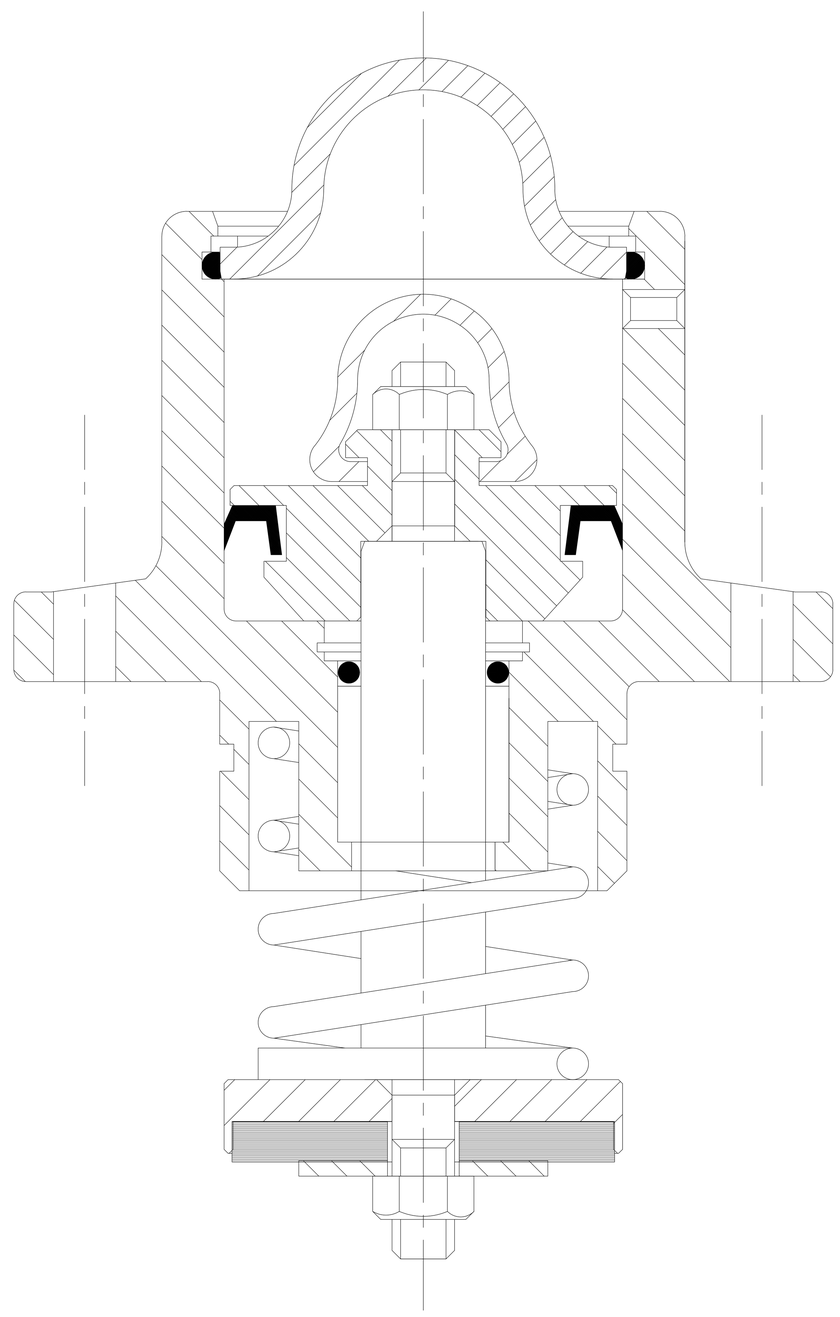

PART SECTION VIEW
SHOWING AIR FITTINGS

C	NEW LOGO	22.02.2013	TOM
B	DATE ADDED	31.03.2008	TOM
A	NEW		TOM

66-69 Rabans Close
Aylesbury Bucks HP19 8RS
Tel: 01296 619510 Fax: 01296 619519
sales@alpeco.co.uk