ASSEMBLY OF:
FAUCET300CAM, FAUCET300THD, FAUCET250CAM AND FAUCET250THD

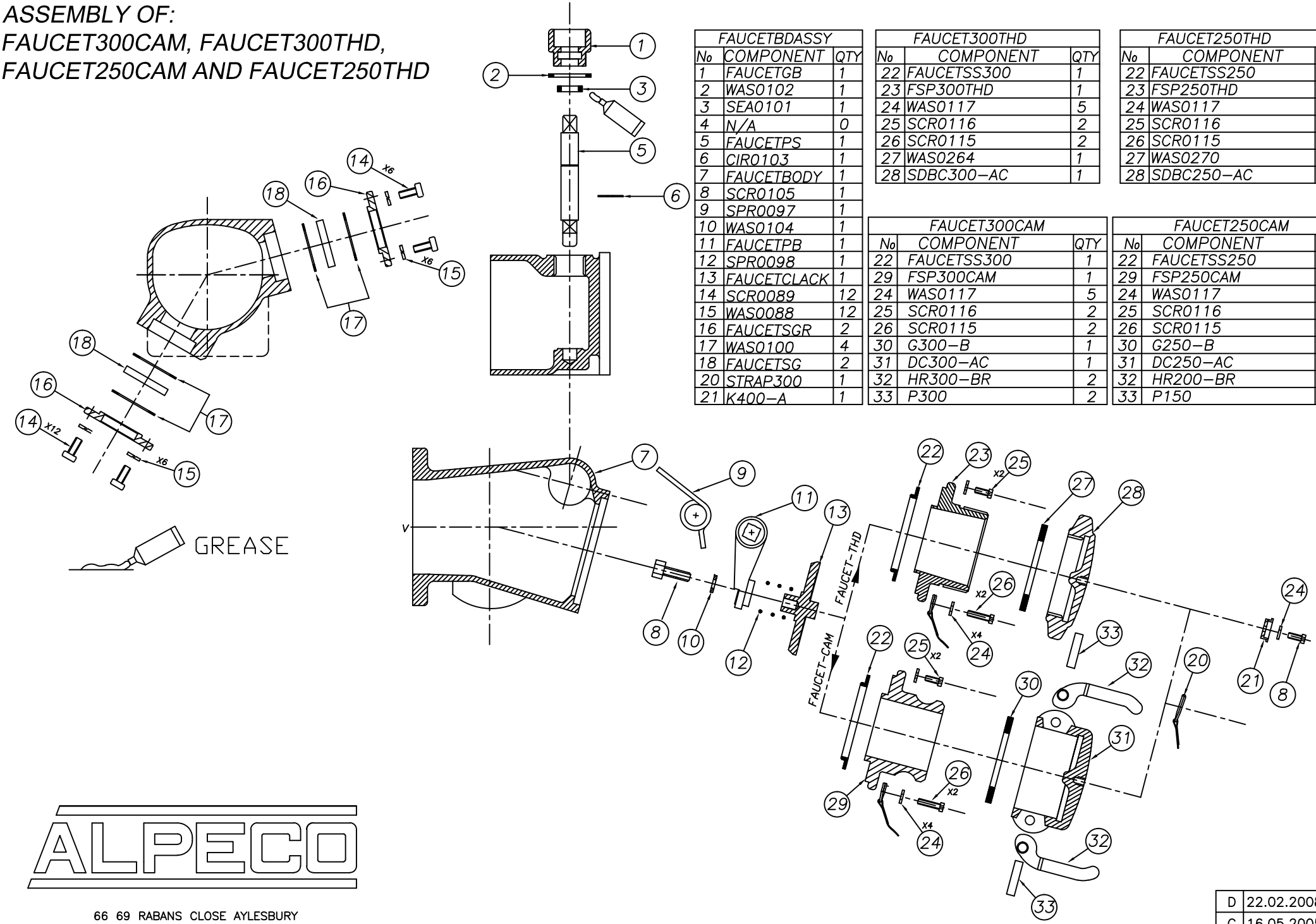

FAUCETBDASSY		
No	COMPONENT	QTY
1	FAUCETGB	1
2	WAS0102	1
3	SEA0101	1
4	N/A	0
5	FAUCETPS	1
6	CIR0103	1
7	FAUCETBODY	1
8	SCR0105	1
9	SPR0097	1
10	WAS0104	1
11	FAUCETPB	1
12	SPR0098	1
13	FAUCETCLACK	1
14	SCR0089	12
15	WAS0088	12
16	FAUCETSGR	2
17	WAS0100	4
18	FAUCETSG	2
20	STRAP300	1
21	K400–A	1

FAUCET300THD		
No	COMPONENT	QTY
22	FAUCETSS300	1
23	FSP300THD	1
24	WAS0117	5
25	SCR0116	2
26	SCR0115	2
27	WAS0264	1
28	SDBC300–AC	1

FAUCET250THD		
No	COMPONENT	QTY
22	FAUCETSS250	1
23	FSP250THD	1
24	WAS0117	5
25	SCR0116	2
26	SCR0115	2
27	WAS0270	1
28	SDBC250–AC	1

FAUCET300CAM		
No	COMPONENT	QTY
22	FAUCETSS300	1
29	FSP300CAM	1
24	WAS0117	5
25	SCR0116	2
26	SCR0115	2
30	G300–B	1
31	DC300–AC	1
32	HR300–BR	2
33	P300	2

FAUCET250CAM		
No	COMPONENT	QTY
22	FAUCETSS250	1
29	FSP250CAM	1
24	WAS0117	5
25	SCR0116	2
26	SCR0115	2
30	G250–B	1
31	DC250–AC	1
32	HR200–BR	2
33	P150	2

PART NUMBER
FAUCET300CAM, FAUCET300THD, FAUCET250CAM, FAUCET250THD

ALPECO

66 69 RABANS CLOSE AYLESBURY
BUCK. HP19 8RS
TEL: 01296 619510 FAX: 01296 619519

ISSUE	DATE	APP
D	22.02.2008	TOM
C	16.05.2005	
B	20.02.2001	
A	16.05.2000	